NOZZLE SCHEDULE			
ITEM	QTY.	NAME	DESCRIPTION
N1	1	INLET	1"–150# RFSO ASME B16.5
N2	1	OUTLET	1"–150# RFSO ASME B16.5
N3	1	DRAIN	1" NPT
N4	1	VENT	1/4" NPT
N5	2	W.G. CONN.	1/2" NPT
N6	2	LIQ. LEVEL CONN	1" NPT

REV	DATE	CHANGE	ECR	BY	APP
A	02/14/03	NEW ISSUE	B243	LH	VA
B	10/2/05	10–1/2" F–F WAS 23"	D462	FM	LH
C	11/1/05	REVISED TITLE BLOCK	D507	FM	LH

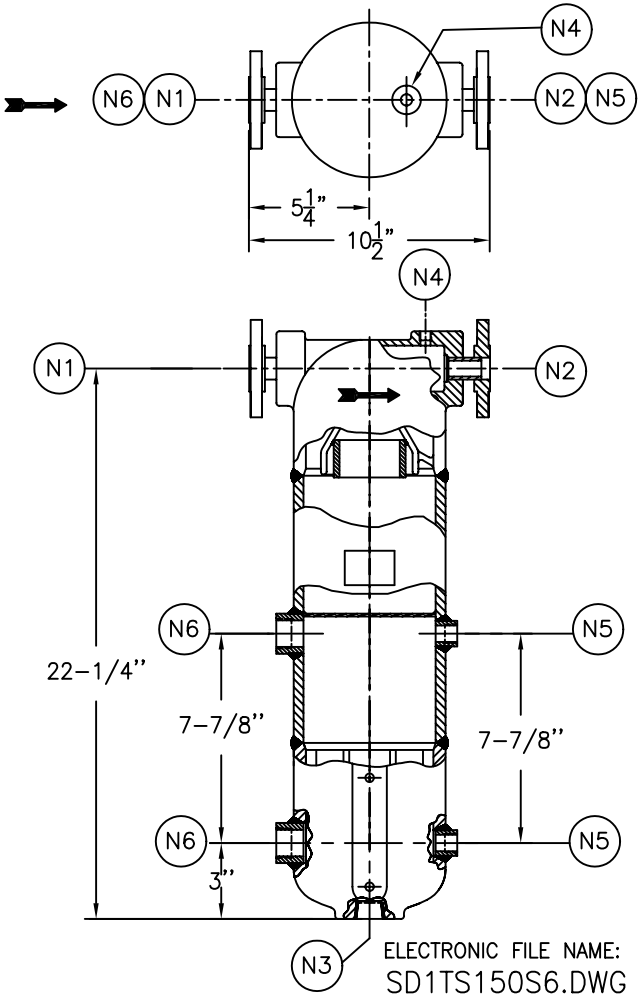

ELECTRONIC FILE NAME:
SD1TS150S6.DWG

NOTES:

1. UNITS ARE TO BE DESIGNED, FABRICATED &" U" OR "UM" STAMPED (IF REQ'D) IN ACCORDANCE WITH ASME B & PV CODE, SECTION VIII, DIVISION 1, IN COMPLIANCE TO CURRENT PUBLISHED ADDENDA.
2. ALL DIMENSIONS ARE IN INCHES.
3. ALL BOLT HOLES ARE TO STRADDLE NATURAL CENTERLINES.
4. SHIPPING WEIGHT: 75 POUNDS.
5. DESIGN DATA:

DESIGN PRESSURE–	150 PSIG
DESIGN TEMPERATURE–	300° F
MIN. DESIGN METAL TEMP.–	–20° F @ 150 PSIG
HYDROTEST PRESSURE–	195 PSIG
CORROSION ALLOWANCE–	0 INCHES

6. MATERIAL: 316 S. STEEL (CASTING DESIGN)

STANDARD

CUSTOMER:
REG. NO.:
P.O. NO.:
TAG NO.:
PART NO.: 1TS150S6, 1TS150S6U, 1TS150S6M

TOLERANCES UNLESS OTHERWISE SPECIFIED PER ENGINEERING STANDARD ES– ––

UNAUTHORIZED USE, MANUFACTURE OR REPRODUCTION IN WHOLE OR IN PART IS PROHIBITED. DRAWING, DESIGN AND OTHER DISCLOSURES PROPERTY OF EATON FILTRATION, LLC

EATON

EATON FILTRATION, LLC
900 FAIRMOUNT AVENUE, ELIZABETH, NEW JERSEY 07207

NAME: 1" TYPE "TS" GAS/LIQUID SEPARATOR 150# FLG. CAST SSTL

DRAWN	LH	DATE	02/14/03	CHECKED	FM	DATE	02/14/03
APP	VA	DATE	02/14/03	SCALE	NTS	ECR	B243
SIZE A	DWG NO	SD1TS150S6				REV C	