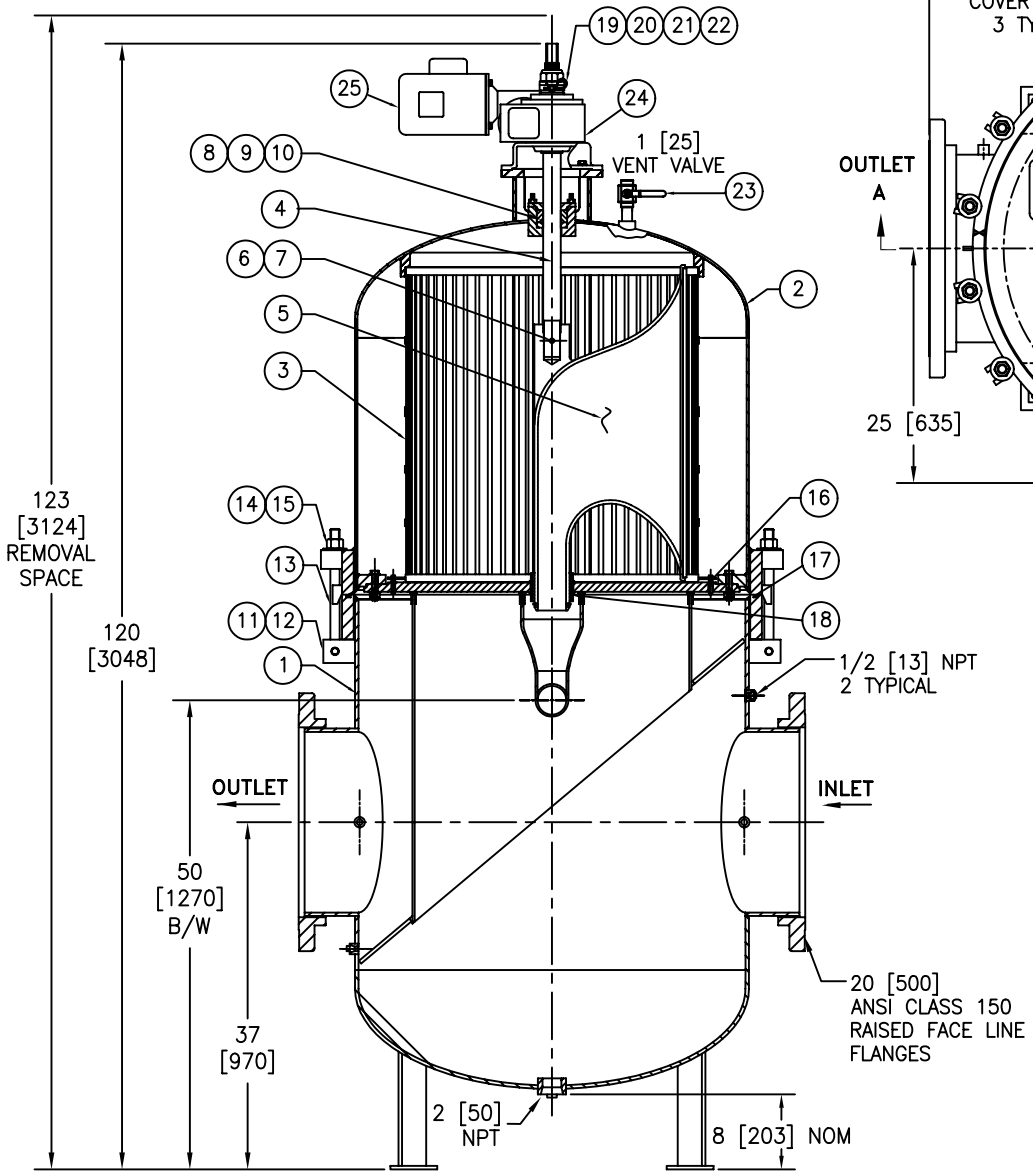

SECTION A–A

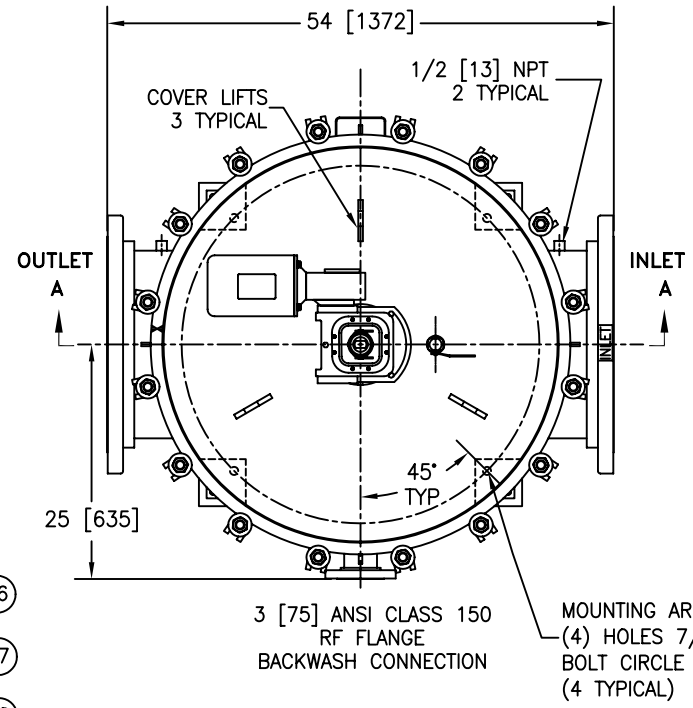

NO.	PART NAME	MATERIAL
1	BODY	CARBON STEEL
2	COVER	CARBON STEEL
3	STRAINING ELEMENT	316 STAINLESS STEEL
4	BACKWASH SHAFT	STAINLESS STEEL
5	BACKWASH ARM ASSEMBLY	DUCTILE IRON / SSTL
6	B/W ARM NUT	STAINLESS STEEL
7	B/W ARM DRIVE PIN	STAINLESS STEEL
8	BEARING HOUSING	STAINLESS STEEL
9	QUAD SEAL	BUNA
10	PILOT PACKING BUSHING	COMPOSITE
11	EYE BOLT PIN	CARBON STL ZINC PL.
12	RETAINING RING	CARBON STL ZINC PL.
13	EYE BOLT	CARBON STL ZINC PL.
14,15	HEX NUT, WASHER	CARBON STL ZINC PL.
16	LOWER SUPPORT RING	CARBON STEEL
17	GIRTH O–RING	NITRILE
18	LOWER BUSHING	COMPOSITE
19	SHAFT DRIVE PIN	STAINLESS STEEL
20	COTTER PIN	STAINLESS STEEL
21,22	STOP NUT, SPACER	CARBON STEEL
23	VENT VALVE, NIPPLE	STAINLESS STEEL
24	GEAR REDUCER	CAST IRON
25	MOTOR	1/3 HP

NOTES:

1. ALL DIMENSIONS ARE INCH [MM].
2. FOR REPLACEMENT PARTS, MODEL NO., SIZE & SERIAL NO. FROM THE STRAINER NAMEPLATE MUST BE FURNISHED.
3. DESIGN PRESSURE: 150 PSI @ 150°F [10.3 BARS @ 65.5°C]
4. INTERNAL COATING: NONE
5. EXTERNAL COATING: PER ES–309
6. WEIGHTS: DRY 3700 LBS, COVER 1480 LBS, FLOODED 10000 LBS [DRY 1680 KGS, COVER 672 KGS, FLOODED 4540 KGS]
7. PART NO.: 25962002200P

CERTIFIED FOR:
QUOTE NO.:
P.O. NO.:
S.O. NO.:
NO. OF STRAINERS:
STRAINING ELEMENT:

EATON FILTRATION, LLC
900 FAIRMOUNT AVENUE, ELIZABETH, NEW JERSEY 07207

NAME: 20" [500] MODEL 2596 AUTOMATIC STRAINER – FABRICATED CARBON STEEL – QUAD SEAL

DRAWN	VAA	DATE	08/20/01	CERT.	LF	DATE	08/20/01

SIZE	DWG NO	REV
A	SD259605P	D

ELECTRONIC FILE NAME: SD259605P.DWG

REF. ECR	D507	DATE	11/1/05

UNAUTHORIZED USE, MANUFACTURE OR REPRODUCTION IN WHOLE OR IN PART IS PROHIBITED. DRAWING, DESIGN AND OTHER DISCLOSURES PROPERTY OF EATON FILTRATION, LLC